DETERMINATION OF DROPLET SIZE DISTRIBUTIONS OF STANDARD AND DRIFT GUARD NOZZLES

István SZTACHÓ-PEKÁRY
Kecskemét College, Faculty of Horticulture

Abstract

Droplet size spectra characteristics across the fan-patterns standard (TP) and drift guard (DG) nozzles were investigated. The size of the nozzles was 0.8, L/min, and the pressure were 1.0 bar to 5.0 bar by 0.5 bar steps. The weighted volume median diameter (D_{v50}) of the spray distribution from each nozzle was determined from the volume of liquid spray and droplet size distribution at 0.25 cm (1 s) time-intervals across the 65 cm swath using a laser diffraction measurement device. It was determined, that the increasing pressure is occurring increasing fan angle and swath width. The D_{v50} droplet median diameter were at pressure 1.0 bar 16%, at 2.5 bar 21% and at 5.0 bar 6% greater for drift guard nozzles than standard nozzles.

Keywords

Standard fan nozzle, Drift guard nozzle, Spray, Droplet size

Introduction

Pesticides should be properly applied to achieve satisfactory pest control. Nozzle performance affects the accuracy of spray application through metering, atomizing and controlling the distribution of spray throughout the spray swath. Changes in these nozzle functions, due to nozzle design, can influence the efficiency and effectiveness of chemicals applied.

Deposition efficiency of droplets on targets is affected by several variables such as droplet size, droplet velocity, and target surface [1]. Droplet size also affects the biologica1 activity of control agents and several laboratory studies have shown increased biological activity of insecticides with a droplet size range smaller than 100 µm [2]; [3]; [4]. BODE – BUTLER [5] indicated that spray drift, target deposit, and coverage depend largely on the range of droplet sizes produced by the atomizer. Small droplets, if deposited on the target, provide better coverage and this usually results in increased control of some pests. However, small droplets are susceptible to drift. Large drops are less susceptible to drift, but may result in inadequate spray coverage at low spray application rates. BODE – BUTLER [5] indicate that coverage may be inadequate for satisfactory control of some pests for droplets greater than 200 µm with low volume application rates. HIMEL [2] referred to the optimum droplet size as one that produces maximum control while using a minimum amount of pesticide and creating minimum ecosystem contamination.

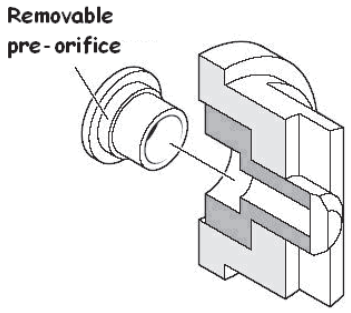

Figure 1. – Structure of dg-nozzle

Agricultural spray nozzles are manufactured from variety constructions. Nozzles made from different construction due to flow through their tips. Nozzles have offered increasing drift control since the mid-1980s. First, there were nozzles that could operate under low pressures, such as the flat-fan nozzle. The next refinement was the pre-orifice design, developed by Spraying Systems Co., brought on the market „drift guard" or DG-nozzle (Fig. 1).

The objective of this study was to investigate the effect of nozzle design on droplet size spectrums delivered by fan nozzles with different flow pressure.

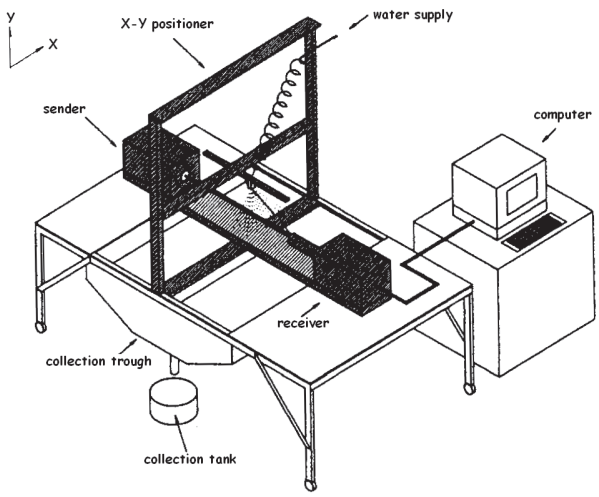

Figure 2. – Droplet size analysis test stand

Equipment and procedure

The nozzles selected for this study delivered flat spray patterns (110^0 fan angle) with nominal flow rates of about 0.8 liter/min, orifice tip were at both of the nozzle types stainless steel (VS), fabricated by Spraying Systems Co. Three TP-type nozzle and three DG-type nozzle tips were randomly selected from a set of nine-nine nozzles. The weighted volume median diameter (D_{v50}) was calculated for each standard (TP) and drift guard (DG) nozzle. This was accomplished by using the spray volume data in conjunction with the volume median diameter data taken from same positions at 0.25 cm intervals across the centerline of the longitudinal axis of the spray swath.

Droplet size test

Droplet size spectrums of standard and drift guard nozzles were measured with the system illustrated in figure 2. This system consists of a Malvern, SPRAYTEC laser-diffraction droplet and particle sizer (Malvern Instruments Inc.), a pumping system, an X-Y positioner, and a computer to perform data collection and analyses. The Malvern SPRAYTEC can measure droplets ranging in size from 0.5 to 1880 µm with an accuracy of ±4% on the volume median diameter. Additional details of operation of the Malvern SPRAYTEC are discussed by SZTACHÓ-PEKÁRY [6] and [7].

The test nozzle was mounted on the horizontal member of the X–Y positioner. An electric motor for the X positioner was used to move the nozzle in the horizontal laser plane (X) direction. A 750 mm focal length lens was used during all the droplet size tests. This lens can measure droplets from 5 µm to 1600 µm diameter.

The nozzle was positioned between the laser transmitter and receiver, and at 50 cm above the laser beam. This is the height

recommended by the nozzle manufacturers for applying pesticides with 110° spray angle nozzles. Droplet size measurements were taken at 0.25 cm intervals over a range of distances from -32.5 cm to 32.5 cm in the X direction. This range included the entire spray pattern on both sides of the pattern.

A fine filter was placed inside the nozzle body to insure clean water at the nozzle orifice. A pressure regulator maintained pressure at the nozzle between 1.0 and 5.0 bars by steps 0.5 bar. The structure of the test stand shows the Fig. 1.

Table 1. – Droplet size and size difference of TP- and DG-type nozzles

P [bar]	DG D_{v50} [µm]	TP D_{v50} [µm]	Difference [%]
1.0	**412***	358**	15%
1.5	332**	286**	16%
2.0	276**	234**	18%
2.5	246**	*203****	21%
3.0	*214****	*191****	12%
3.5	*197****	*182****	8%
4.0	*189****	*176****	8%
4.5	*185****	*173****	7%
5.0	*176****	*166****	6%

***very coarse**, **coarse, ****medium*

Several precautions were taken to eliminate factors that could adversely influence measurements with the MALVERN SPRAYTEC. To eliminate deposition of small droplets on outer surfaces of the optical lenses of the droplet size analyzer, an air curtain created by a small fan was directed to the front of the beam expander and detector lenses.

After a nozzle was mounted on the X positioner, and the nozzle position established, the laser was turned on and the electronic and the optical backgrounds reading were determined without spray. This is necessary to determine the influence of the ambient light and solid particulates in the air on the measurements. Next the pump was activated and the spray pressure was adjusted to the actual measurement pressure. When the flow rate was steady (about 1 min), the droplet size analyzer was activated to take measurements. The computer software allows the droplet size analyzer to make a 0.1 ms snap in each seconds during the measurement. Values from this data were used for the final droplet size analysis at each position. After each measurement, the pump was turned off. Several statistics of the droplet distributions were determined. Some of the statistics determined at each test location were: D_{v10}, D_{v50}, D_{v90}. represent droplet diameters where 10, 50 and 90%, respectively, of the total spray volume is composed of equal or smaller diameter droplets. With similar method was measurement process repeated by the both nozzles nine times

Results and discussion

Difference between the droplet sizes of investigated nozzle types

The liquid feed pressure dependence of the output of two flat-fan nozzles (a standard TP-11002-VS nozzle and a DG-110020-VS pre-orifice atomizer nozzle) was determined using the SPRAYTEC system. Table 1 show how the D_{v50} changes with operating pressure for each of the nozzles. On Fig. 3 it is to see the percentage difference between the standard and drift guard nozzles too.

The results show that the D_{v50} for nozzle TP-11002-VS varies from 358 µm at 1.0 bar to 166 µm at 5.0 bar. From 1.0 to 2.0 bar this is a coarse spray. Between 2.0 and 5.0 bar pressure this nozzle is classified as medium, and is therefore a suitable for the treatment of broadleaf weeds. The D_{v50} for nozzle DG-110020-VS varies from 412 µm at 1.0 bar to 176 µm at 5.0 bar. From 1.0 to 3.5 bar this is a very coarse and coarse spray, respectively, suitable for soil-applied herbicides, between 3.5 and 5.0 bar this nozzle is classified medium spray, as such are suitable for the treatment of broadleaf weeds.

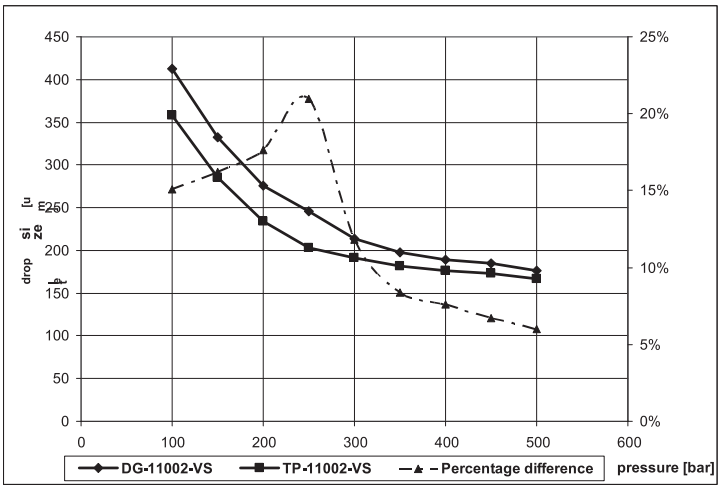

Figure 3. Droplet size and size difference of TP- and DG-type nozzles

Mean Droplet Size Distribution

It should be noted that the data presented in table 1and figure 3 take into account the difference in volume of liquid passing through the laser beam at each data point across the spray pattern. Typically, the spray volume distribution patterns from fan-pattern nozzles have triangular shapes, with the greatest amount of liquid in the middle of the pattern and with a gradual decrease in the amount toward both ends. Therefore, although the D_{v50} values may be higher toward both edges of the pattern (as illustrated in Fig. 4.), values near the ends of the patterns do not have as much influence on the overall droplet size distribution as values near the centers of patterns. Figure 4 indicates that the proportion of larger size droplets is greater than smaller size droplets away from

the center of the spray pattern. Actually, there were more large size droplets at the centers of the patterns than at the ends of the patterns. The D_{v50} values in the centers of the patterns were smaller because of the greater portion of volume of liquid in smaller droplets than at the edges of the patterns.

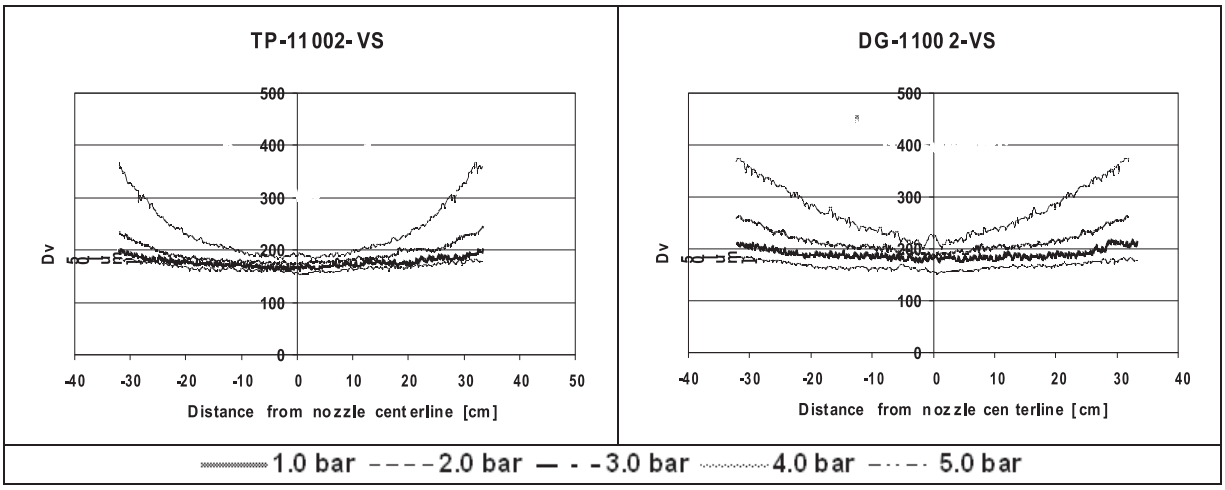

Figure 4. Droplet size distribution across the fan patterns of standard and drift guard nozzles

The correlation coefficient (R) associated with the relationships expressed in equation 2 for new nozzles constructed of different materials varied from 0.978 to 0.997 (Table 3).

Conclusions

- Weighted volume median diameters (D_{v50}) of droplet size of drift guard nozzles were between 1.0 and 5.0 bar pressure greater than the D_{v50} of standard nozzles.
- The D_{v50} of droplet size measured data from both nozzles followed decreasing root power curve as pressure at the nozzles increased.
- The D_{v50} of droplet size distributions generated by standard and drift guard nozzles with the same rated flow capacity, were different.
- The variance of D_{v50} of droplet size across the fan pattern was generally greater for standard than drift guard nozzles.

References

[1] HALL, F. R. – D. L. REICHARD (1985): Initial studies on the effects of droplet size and electrostatics on spray deposition efficiencies. Pesticide Formulations and Application Systems, ed. T. M. Kaneko and L. D. Spicer, 4:61-66. Philadelphia, PA: American Society for Testing Materials.

[2] HIMEL, C. M. (1969): The optimum sizes for insecticide spray droplets. J. of Economic Entomology 62:919-925.

[3] MUNTHALI, D. C. (1984): Biological efficiency of small dicofol droplets against Tetranychus urticae (Koch) eggs, larvae and protonymphs. Crop Protection 3:327-334.

[4] ADAMS, A. J. – M. R. ABDALLA, – I. J. WYATT – A. PALMER (1987): The relative influence of the factors which determine the spray droplet density required to control the glasshouse whitefly, Trialeurodes vaporariorum. Aspects of Applied Biology 14:257-266. (Wellesboume, Warwick, United Kingdom: Association of Applied Biologists.)

[5] BODE, L. E. – B. J. BUTLER (1983): Spray characteristics of rotary atomizers. Pesticideformulations and application systems: Second Conference, ed. K. G. Seymour, 89-104. ASTM Publication STP 7954. Philadelphia, PA: American Society for Testing Materials.

[6] SZTACHÓ-PEKÁRY I. (2009): Új rendszerű cseppméret-elemző berendezés. Mezőgazdasági Technika (Gödöllő) 50. k. 6. sz. 2-4 p.

[7] http://www.bioportfolio.com/biotech_news/Malvern_Instruments_40.htm