HEATING OF MULTI SPAN GREENHOUSES, UTILIZING POWER PLANTS' LOW TEMPERATURE COOLING WATER

Viktor MADÁR[1], Endre JUDÁK[2]
[1] Termo Energo System Ltd
Hungary, H-2103 Vásárosnamény, Tamási Áron u. 3.
Tel.: +36 45 570 192
[2] Szent István University, Faculty of Mechanical Engineering, Gödöllő;
Hungary, H-2103 Gödöllő, Páter K. u. 1.
Tel.: +36 28 522-043;
E-mail: madar.viktor@gek.szie.hu;
judak.endre@gek.szie.hu

Summary

The combined cycle power plant, powered by natural gas, recently built in Vásárosnamény induced the development of the low temperature greenhouse heating system. During the process of research and development a modular concrete panel was researched, which is able to utilize the cooling water at 30-35°C to heat greenhouses without complementary heating. From tender subsidies we built an experimental greenhouse with a surface area of 780 m^2 to study the concrete panel's thermal parameters.

Introduction

Due to its operation, the power plant in Vásárosnamény produces low temperature cooling water, which can only be utilized in specially designed heating system. Even in the coldest months, this water's flow reaches 5000 m^3/h. Harnessing this cooling water's waste heat to heat greenhouses would be both economically and environmentally favorable, since it would decrease the thermal burden on the Tisza's water. Most greenhouses utilize boilers or high temperature thermal water for heating. Since the cooling water is only at 30°C, it can be only utilized in an original greenhouse heating system, with a heat pump extension to the original system. Due to the high installation costs of a device like this, its application is not recommended. Low temperature heating and cooling devices, like calorifers, plastic tube heat exchangers, or large area concrete floor heating and concrete heat exchanging floors would be suitable for reaching the two goals mentioned before. For this reason, we accomplished the analysis of these systems and developed heat exchanging concrete flooring. The object of my research is a double layered plastic greenhouse, and I used the data of hydrocultural paprika growing as basic data.

Methodology

After evaluating specialized literature and systems already operating, the surface heating seemed suitable for further development, especially the heat exchanging concrete flooring. In order to enhance it, the following improvements should be carried out:

- Flow production should be solved, to decrease costs of manufacture.
- A panelized form should be developed to increase transportability and removability.
- The area of the heat exchanging surface should be increased to enhance passive heat transfer.
- Small cross-sections should be utilized to increase regulability.
- The pressure drop, caused by the heating tube in the concrete panel, should be decreased.
- The level of heat standardization should be enhanced, by placing the input and output tubes near each other and increasing the density of tube placement.

In order to meet the ideas mentioned before, we defined the size of the panel to be 1100 x 3000 mm, which mates the 6,5m wide greenhouse aisle. By doing so, the distributor and collector tubes can be placed at the pillaring of the greenhouse where they will not disturb cultivation. The panels can be connected in parallel to the heating water's distributing and collecting tubes. The maximum length of the Ø 16mm HDPE tube is 42m in each panels, due to pressure drop. To increase the heat exchanging surface and to improve heat distribution of the panels, we created ribs on their surface oriented at right angles to the tubes inside. The maximum area increase can be achieved when the ribs are also in right angles to each other too, therefore the effect of heat radiance of the ribs at each other can be avoided too. In this way, the surface on a panel with 3.3m^2 area can be increased to 4.65m^2.

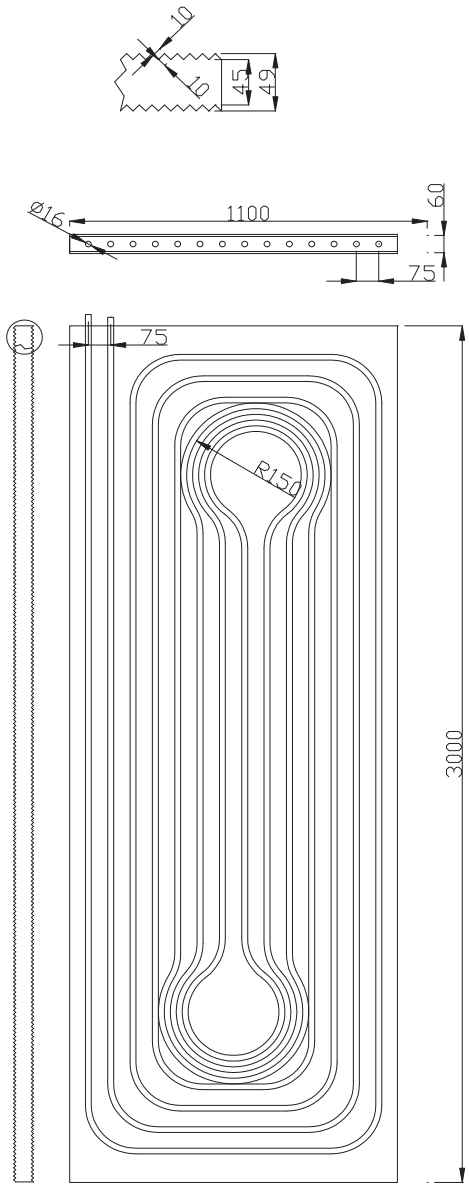

Figure 1. The improved panel

The surfaces standing in 45° have an additional advantage: the heat radiance is largest in the normal direction of any surface, so it enables a better sideway radiance than the ordinary floor heating, and so the effect of radiation prevails more on the leaves, stalks and the crop itself.

The data of the experimental system

Area of the greenhouse:	780 m^2
The number of panels installed:	200pcs
One panel's area / heating surface:	3,3 m^2 / 4,65 m^2
Total area / heating surface of the panels:	660 m^2 / 930 m^2
Length of heating tubes utilized in panels:	8120 m
Length of distributing tube running near the pillaring:	300m
The exterior surface of the greenhouse:	1417 m^2
Ratio of the area and the exterior surface of the greenhouse:	1 : 1,816

In order to carry out the measurement, we installed Pt1000 resistance temperature sensors, moisture sensors and light sensors. To register the radiance, we installed blackbody (sensible heat) thermometers facing both upwards and downwards. We registered air temperature in 5 different heights (50, 100, 150, 200, 250 cm). We measured the panels' surface temperature on 2 panels, with 7 thermometers attached to the ribs. To measure flow, we used a WOLTEX M DN80 water meter.

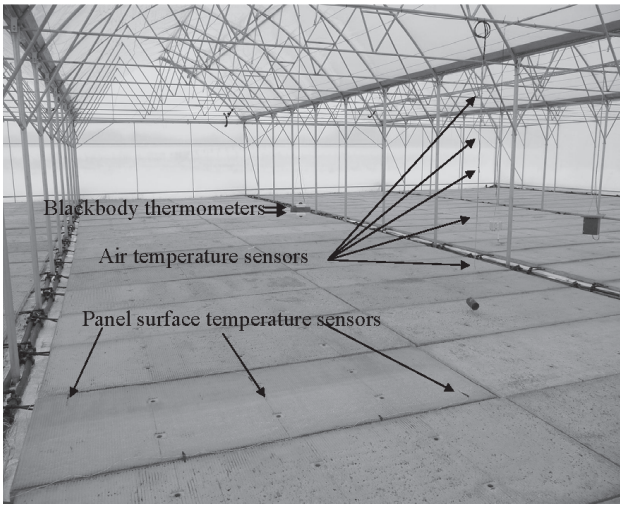

Figure 2. The sensors' placement

We used an Agilent 34980A data logger, with two 34921A 40-channel armature multiplexer cards and one 34952A multifunction module card, to register data. We took samples every 60 seconds. The measuring started at 10-01-2009 and ended at 10-03-2009. We placed the data logger in the heating center. Three condensation gas boilers, each with 80kW capacity, supplied the heat and the water temperature was regulated with a three-passage valve, using a HAGA KD48D controller during the measurement period. The previously set input water temperatures were 25°C, 30°C, and 35°C.

Results

When setting the input water at constant 30°C, the panel decreased its heat transmission with the increase of its inner temperature. This effect is in harmony with the paprika's need for heat, since it depends on the amount of light. This is another advantage of the large area heating compared to the original steel tube heating. At night, the thermometer registering the radiance heat measured a value higher than the air temperature with around 1.5-2 °C. Accordingly, the sensible temperature is higher than the air temperature, so the plants could tolerate an environment cooler by 1-2 °C, in comparison with the original steel tube heating, this matter is the object of further analysis.

In greenhouses, the temperature's changing by the height is important for the plants; this value's change can be followed on figure 3. Due to the high temperature at floor level, hydrocultural plants can not be placed directly on the panels' surface.

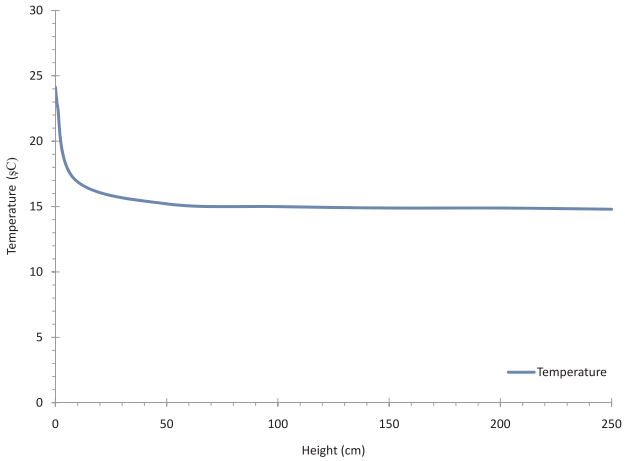

Figure 3. Temperature's changing with the height

We measured the experimental double layered plastic covered multi span greenhouse's heat requirement per area unit, with a temperature difference between the exterior and interior air of 30°C and a 3 m/s wind speed, this value reached 216 W/m^2. We determined the thermal efficiency of the concrete panels, and this value showed that our research was successful, since we reached almost double of the figure stated in specialized literature (100W/m^2), which value makes the concrete panel a fully efficient standalone heating system. We can see the relation between the output water's and the surface's temperature in figure 4. The relation between the minimal output water temperature and performance can be determined with the help of this correlation.

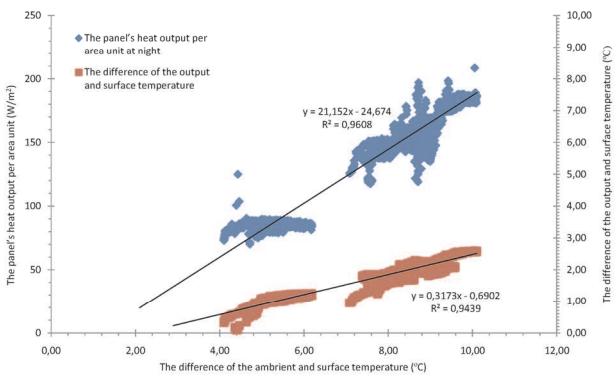

Figure 4. The developed panel's heat output's changing by the difference of the output and surface temperature.

Conclusions

- A more idealistic 1 ha (100 x 100 m) area greenhouse surface: The area's ratio is 1,39 : 1. Concerning the experimental greenhouse's heat requirement per area unit, in an ideally arranged case it can be lowered by 20%.
- Based on the measurements and calculating with a Δt=30ºC double plastic layered multi span greenhouse's heat requirement per area unit is 180 W/m^2

– Taking into consideration the fact that 91% of the greenhouse's area can be covered with panels, the panel must ensure a heat transfer of 196 W/m^2.
– If the air temperature must be set at 15°C in the greenhouse, with a -15°C external temperature, the panels' surface temperature should be 25.5°C. This means the temperatures of the output water and the input water should be 28°C and 33°C.

Acknowledgements

Making use of this opportunity, I would like to thank the support provided for this agricultural energetic research by the National Office for Research and Technology (NKHT) and the Agency for Research Fund Management and Research Exploitation (KPI).