APPLICATION OF A REMOTE SENSING METHOD BY ENVIRONMENTAL PROTECTED MANURE UTILIZATION

L. FENYVESI[1], Sz. KÉSMÁRKI-GALLY ERDEINÉ [2]
[1] Hungarian Institute of Agricultural Engineering
Tessedik Sámuel u.4., Gödöllő, H-2100, Hungary
Tel.:+36 28 511 610,
E-mail: fenyvesi@fvmmi.hu, galli@fvmmi.hu

Abstract

The Hungarian Institute of Agricultural Engineering has a remote sensing device, the AISA DUAL hyperspectral sensor. It can define the change of reflectance as function of the spectrum.

Long period test series were launched to decompose the carbon resources left on the soil surface, in the course of conservation tillage.

Based on hyperspectral pictures areas, where reflectance differences are visible, were allocated. The soil features were defined at the given coordinates. Significant connection was determined between the color values and soil features.

Suitable construction has been created, with a measuring and controlling system for accurate and dosed spreading of slurry.

Keywords

plant feeding, remote sensing, soil features

Introduction

By the conservation tillage the replacement the available nutrients taken off by the harvesting has to be cover. The grain crop was taken over from the test area and the chopped foliage, stem, and cob was spread on the soil surface. This residual one – apart from the nutriment elements – fundamentally provides an organic carbon source that only partly implies available elements for the vegetation.

The nitrogen and microorganism source may be ensured by decomposing and humifying of the organic carbon – lignocelluloses by the suitable spreading of the slurry. Long time (8-10 years) examinations are planned for the justification of our assumption on our test area.

The environmentally friendly execution system of spreading organic manure and additional artificial fertilizer is presented in our research work at the beginning of the testing period.

It is necessary to know the internal content features of the used slurry and beside this the side specific features of the soil and the harvested vegetation.

A catalogue that sorts the different types of soil based on their optical characteristics was prepared (Baungardner et al., 1985). In the case of artificially produced model soils (which were artificial organo-mineral complexes of different types of clay minerals, loess and humic substances extracted from different types of soil) the exploration of the relationship between the optical characteristics and chemical components was successful (Baungardner et al., 1990). The setting of the model soil content was made by factorial experiment planning method. There is a significant relationship between the shape and the band of the spectral reflectance curve and the content characteristics (Stefanovits et al., 1989). A similar connection can also be found between the color of the plant leaves, the content characteristics as well as the condition of the plant (Papp-Fenyvesi, 1992).

The accurate measurement of the color characteristics is not possible by using the photo-emulsion, color measurement devices or color digital cameras.

In the case of the soil and the plant leaves it can be stated that, due to the lack of the material that remarkably influences the reflectance, the contents can be determined better by integral optical characteristics (for example: color), than by differentials (for example: measuring reflectance at different points of the spectrum).

Material and methods

The accurate quantitative definition of the color characteristics is possible by the application of the hyperspectral remote sensing method. Our objective is to develop a method by which the definite content characteristics of the soil may be defined with a level of accuracy required for the precision fertilization, in a spatial-oriented way by applying hyperspectral remote sensing method.

The AISA DUAL hyperspectral sensor of our institute operates in the range of 400-2500 nm wavelength and has a high, 1 nm sensitivity inside the visual spectrum. The machine is able to take pictures at a certain wavelength, where the density deviation shows the changing of the reflection and can be seen as a picture. The changing of the reflectance can be shown at any point of the recorded object in the function of the spectrum (see Fig. 1.).

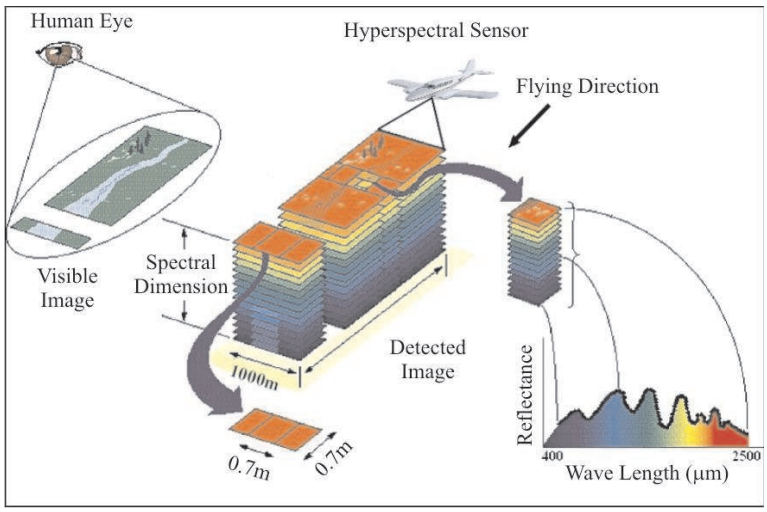

Figure 1. Illustration for the hyperspectral aerial remote sensing (Specim Ltd)

The recorded crude pictures can be radiometrically corrected and georectified (to correct the errors that were caused by the unsteadiness of the plane) by using a special software called Cali-Geo. The detected pictures can be further processed using the ENVI 4.1 3D software. The information from the pictures is stored in GIS, so the field works and the sample collecting can be precisely done. The device itself is an effective picture display system and a spectrophotometer in one (Fintha, 2007).

The color ingredients on a certain point of the surface can be calculated by the following equations (Gyuricza et al., 2006).

$$X_{x,y} = A \int_{380}^{780} P_c(\lambda)\rho(\lambda, x, y)\bar{x}(\lambda)d\lambda \quad (1)$$

$$Y_{x,y} = A \int_{380}^{780} P_c(\lambda)\rho(\lambda, x, y)\bar{y}(\lambda)d\lambda \quad (2)$$

$$Z_{x,y} = A \int_{380}^{780} P_c(\lambda)\rho(\lambda, x, y)\bar{z}(\lambda)d\lambda \quad (3)$$

The A in the above equations is constant, which norms the color components (their maximum value is one if reflectance is $\rho(\lambda)$=1). $P_c(\lambda)$ is the spectral output distribution of the illumination, $\rho(\lambda,x,y)$ is the reflected output distribution from the surface of the observed object (in our case the surface of the examined field); $\bar{x}(\lambda), \bar{y}(\lambda), \bar{z}(\lambda)$ values are the CIE distribution coefficients of the spectrum colors, that ensure the transformation to the color ranges. Although our instrument measures up to 2500 nm, the integral expressions above are only valid in the „visible" range.

The actual illumination $P_c(\lambda)$ comes from the Sun that changes throughout the day, and its value is affected by the atmosphere too. The actual value of $P_c(\lambda)$ and the reflected energy on the points of the surface $\rho(\lambda,x,y)$ are measured by the hyperspectral sensor.

Photographs were made from the B 22 field in Bábolna (Hungary) with the modified Piper Pa-23-250 „AZTEC" type twin engine airplane. The detection height was 1000 meters. First time the field was bare in April 2006 then it was covered in August at the end of the ripening of the corn.

For the content examinations we have collected soil samples from a 100 x 100 m grid points from the field. The soil samples have been defined by an accredited laboratory (Szent István University, Department of Chemistry and Biochemistry). The measured parameters were as P_2O_5 and K_2O, but the simply phosphor and potassium will be named hereafter. Three pieces of samples weighing one kilogram each have been taken for one measurement point, which have been averaged. We present the place of the samplings on the Fig. 2. The humus, nitrogen, phosphor and potassium content of the soil were established (see Table 1).

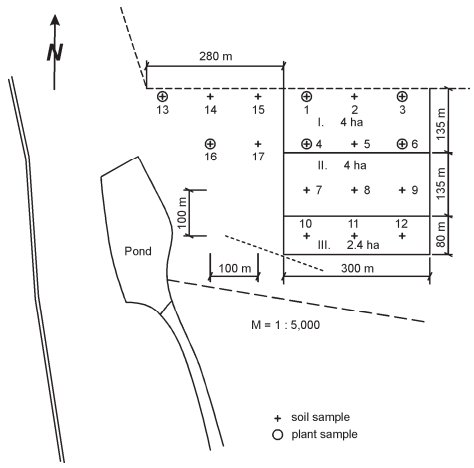

Figure 2. The position of the soil and plant samplings

Table 1. The soil characteristics

No.	Humus (g/kg)	Nitrogen (g/kg)	Phosphor (g/kg)	Potassium (g/kg)
1	2.54	0.0101	0.783	0.633
2	2.18	0.0162	0.624	0.773
3	2.61	0.0167	0.711	0.613
4	2.35	0.0121	0.682	0.613
5	2.64	0.0172	0.902	0.639
6	2.27	0.0155	0.724	0.572
7	2.78	0.0176	0.873	0.645
8	2.84	0.0214	0.060	0.863
9	3.00	0.0194	0.922	0.741
10	2.68	0.0192	0.986	0.864
11	3.06	0.0234	0.120	0.944
12	2.86	0.0214	1.210	0.974
13	2.14	0.0294	0.539	0.404
14	2.22	0.0308	0.795	0.645
15	2.74	0.0204	0.921	0.883
16	2.94	0.0225	0.662	0.604
17	2.70	0.0195	0.826	0.724

In order to define the interrelationships we have measured the composition of the yield on the different color characteristics by the use of GPS. The plant samples were taken at the soil sampling places. On certain places the weight and the above mentioned materials (N, P, K) of the collected plants from 1 m^2 were measured (see Table 2).

The examined field was divided to three parcels (see Fig. 2) for the tests. The nutrient balance was set up with the average values defined on the given parcel, accomplishing the nutrition by the slurry with identical portions.

Table 2. The measured corn characteristics and the humus content of the soil

Humus content (g/kg)	Corn cob (kg/m^2)	Green weight (g/m^2)	Total weight (g/m^2)	Dry matter (g/kg)	Nitrogen (g/kg)	Phosphor (g/kg)	Potassium (g/kg)
2.54	0.530	1490	2020	533	9.40	4.54	11.83
2.35	0.530	1530	2060	512	9.22	4.63	9.82
2.27	0.800	1610	2410	621	11.43	5.81	9.51
2.61	1.600	2110	3710	460	7.36	3.45	4.89
2.14	2.470	3830	6300	366	5.99	2.33	3.21
2.94	3.000	4120	7120	405	6.21	3.16	3.62

The average internal content features of pork slurry:

pH = 6.58; SM = 56.0 g/kg; OM = 40.48 g/kg;
$\sum N$ = 3.6 g/kg; $\sum P_2O$ = 2.84 g/kg;
$\sum K_2O$ = 1.44 g/kg; OC = 21.84 g/kg; KOI = 1.9 x 10^4 mg/l.

The slurry injecting was made by a „Detk 1013 SD" spreading truck (see Fig. 3a). A shaft-driven centrifugal pump was built on the draw bar of the truck. An inductive flow-measuring instrument and a gate valve were mounted into the delivery tube. A recirculation pipe was worked up for the correct mixing of slurry in the container. (see Fig. 3b.)

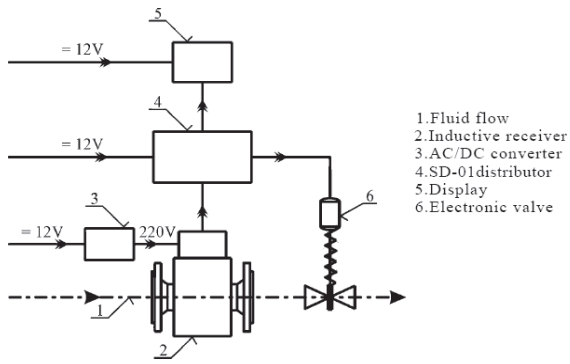

Figure 3. The device of liquid dung portioned spreading
a) Modified DETK 1013 SD spreading truck b) Control system

The RDS RATEMASTER 20 control unit was applied for control. The required slurry quantity (m^3/h) can be set by the system. The instrument displays more information e.g. injected volume flow (1/s), speed (km/h), total spreaded quantity (m^3).

Results

The different color characteristics have been determined by using the taken pictures. The strongest connection is between the measured humus content of the soil [H, %] and the red color values on the picture of the field.

$$X = 292.95e^{-3.1077H} \qquad R^2 = 0.8325 \tag{4}$$

There is also a strong connection between the yield [C, kg/m^2] and the green color values of the pictures [Y] that were taken from the surface of the leaves

$$Y = 0.9437e^{-0.1742C} \qquad R^2 = 0.9077 \tag{5}$$

According to the soil examinations the phosphorus and potassium content was very good, the nitrogen content was only moderate. In this case the N content is determinant in the soil-plant system (Németh, 2006), so the connection was established between the specific mass of corn cob, the humus content and the nitrogen content. In the equation below N means the nitrogen content of the soil (g/kg).

$$N = 0.039 - 0.013H + 7.361*10^{-3}C \qquad R^2 = 0.966 \tag{6}$$

where,

– H is the specific humus content (%),

– C is the specific mass of corn cob (kg/m²).

The spatial distribution of the nitrogen content in the soil can be calculated by only remote sensing and soil examinations at known points (if yield values are known).In our case the nitrogen content in the soil may be given also on other places, whose position can be given by the coordinates of the color features (Fig. 7.), by the use of the equation (6).

The distribution of nitrogen content in the soil may be given with a level of accuracy required by the precision crop nutrition technology (see Fig. 4.).

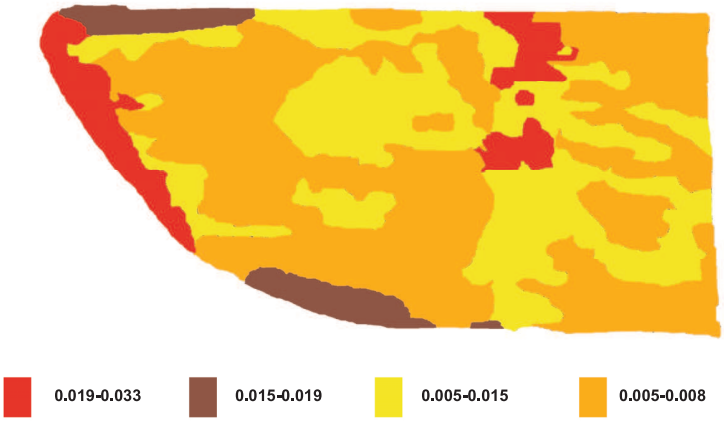

Figure 4. Nitrogen content distributions in the soil of the examined field (g/kg)

All data exist for creation of the nutrition balance. We can carry out the precision (site specific) plant feeding because the suitable information is existed. We set up the nutrition balance of the test parcels at each parcel with average values for the long time lasting tests (see Table 3.).

Table 3. Tillage nutrient balance

Parcel	Average specific value of soil N (g/kg)	Average specific value of field N (kg/ha)	Nutrient leaving with the grain		
			N (kg/ha)	P (kg/ha)	K (kg/ha)
I	0.0145	52.54	41.0	23.0	43.0
II	0.0198	71.75	76.0	38.0	55.0
III	0.0225	81.50	98.0	44.0	62.0

The calculation was made with 25 cm average soil tilth and recorded soil density (ρ = 1.450 kg/m3).

In the first year of the testing series we aimed for the nitrogen balance, taken into consideration the internal content of vegetal parts being left on the soil.

The Table 4 contains the specific values of spread slurry and nitrogen.

Table 4. The features of the nutrient replacement

Parcel	Replaced by slurry			Dose (m^3/ha)
	N (kg/ha)	P (kg/ha)	K (kg/ha)	
I	50.0	40.0	20.0	14.0
II	80.0	62.5	31.7	22.0
III	100.0	79.5	40.0	28.0

Since the potassium- and phosphorus condition of the soil is very good, in the first year our research was focused the nitrogen balance, soil state changes and the disintegration. Then realizing the intensity of the organic carbon digesting our starting fertilizing strategy will be modified.

Conclusion

With the invented equipment and method we were able to successfully solve the side specific fertilizing with slurry and to start experiments to decompose of the lignocelluloses content materials, which are left on the soil surface.

The site specific distribution of the soil and plant features was defined with the application of a modern remote sensing method for the conservation tillage. There is a significant connection between the integral optical characteristics, the color values and the contents of the soil and plant leaves.

In our case the distribution of the nitrogen content in the soil may be given with a level of accuracy required by the precision crop nutrition technology (see Fig. 4.).

The method is a fast and accurate solution to characterize the soil of contiguous areas of production. In case of existence of the above conditions this method can also be used on other places, but we do not have a general solution that covers an arbitrary area

(e.g. the different environmental – climatic – and type differences).

By using the hyperspectral remote sensing method, the color values can be calculated to a high level of accuracy and the spatial distribution can also be determined. The method can be expanded to improve the effect of the green maturing (Lukács, 1982). The results can be easily used for controlling precision operations, because these ones are collected in a spatial IT system. The shown method could be simplified in the future and make more precise by using the data of yield-measurement at harvest (Késmárki-Szűcs, 2007; Magó-Jakovác, 2005). The remote sensing measurement method is known for the site specific determination of the yield (Zaman et al., 2008) and for the determination of the normalised difference vegetation index for grasslands (Smit et al., 2008).

Acknowledgments

This piece of work was carried out with the support of Hungarian Scientific Research Fund (OTKA). The authors would like to express theirs thanks to the partners for valuable help.

References

Baungardner, M.F., Silva, S.J., Biehl, L.L. and Stoner, E.R. (1985), Advances in Agronomy, Academic Press, 38, pp. 1-44.

Baungardner, M.F., Stefanovits, P., Micheli, E. and Fenyvesi, L. (1990), Optical reflectance of artificially prepared organo-mineral complexes, ISES, Japan, pp.102-110.

Fintha, F. (2007), Development of data reduction function for hyperspectral imaging, Progress in Agricultural Engineering Sciences, (1), pp. 67-88.

Gyuricza, Cs., Mikó, P., Földesi, I., Ujj, A. and Kalmár, T. (2006), Investigation of green manuring plants as secondary crop improving unfavorable field conditions to efficient food production, Cereal Research Communications, 34 (1), pp. 191-194.

Lukács, Gy. (1982), Színmérés, Műszaki Könyvkiadó, pp. 341.

Késmárki-Gally, Sz. and Szűcs, I. (2007), The measuring of the agricultural technical development, Bulletin of the Szent István University, Gödöllő, pp. 127-139.

Magó, L. and Jakovác, F. (2005), Economic Analysis of Mechanization Technology of Field Vegetable Production, Hungarian Agricultural Engineering, Periodical of the Committee of Agricultural Engineering of the Hungarian Academy of Sciences, 18, pp. 55-58.

Németh, T. (2006), Nitrogen in the soil-plant system, nitrogen balances, Cereal Research Communications, 34 (1), pp. 61-65.

Papp, Z. and Fenyvesi, L (1992), Estimation of some features of soil by the optical characteristics of the surface, 1st Alps-Adria Workshop on Satellite Data Evaluation and GIS Technologies, Keszthely, pp. 48-52.

Smit, H.J., Metzger, M.J. and Ewert, F. (2008), Spatial distribution of grassland productivity and land use in Europe, Agricultural Systems, Volume 98, Issue 3, pp. 208-219.

Stefanovits, P., Micheli, E. and Fenyvesi, L. (1989), Infrared reflectance of artificially prepared organo-mineral complexes, International Agrophysics, 5 (1-2), pp. 99-105.

Zaman, Q.U., Schumann, A.W., Percival, D. C. and Gordon, R.J. (2008), Estimation of wild blueberry fruit yield using digital color photography, Transactions of the ASABE, pp. 1539-1552.